Bath & Shower Faucet

American Standard

FFASB211-6T1500BT0

Codie

Codie Exposed B&S Mixer W/ Handspray

STYLE SEGMENT

- Transitional

KEY SPECIFICATIONS

- Product Description: Simplica Exposed Bath & Shower Mixer With Shower Kit
- Bathroom Faucet Type: Bath & Shower
- Colour: Chrome
- Hand Shower Included: Yes
- Flow Rate: With Hand Shower: 6.48 , With Spout: 10.56



SHIPPING WEIGHT

- Net Weight: Contact us for more information
- Gross Weight: Contact us for more information

KEY TECHNOLOGIES AND FEATURES

HYGIENE

- Complies with American Standard Quality Standards

COMFORT

- Complies with American Standard Quality Standards

CONVENIENCE

- TWISTFREE

DURABILITY

- Durashine

SUSTAINABILITY

- Complies with American Standard Quality Standards

SAFETY

- Complies with American Standard Quality Standards

OTHERS

- NIL

STANDARDS AND CERTIFICATIONS

- GB 18145-2014
- WI10.0507
- TIS 2066-2552

Bath & Shower Faucet

American Standard

FFASB211-6T1500BT0

Codie

Codie Exposed B&S Mixer W/ Handspray

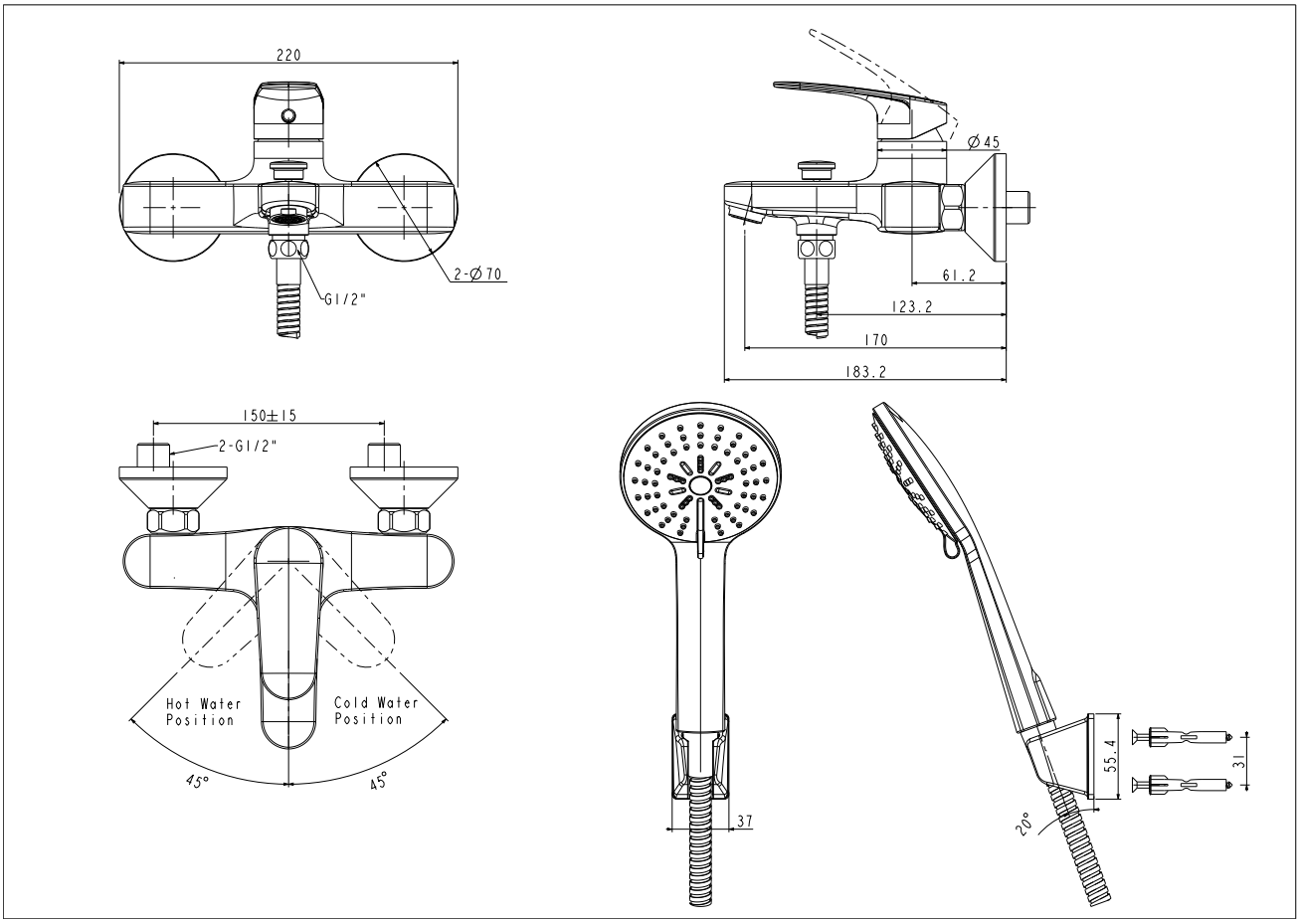

Bath & Shower Faucet

American Standard

FFASB211-6T1500BT0

Codie

Codie Exposed B&S Mixer W/ Handspray

Product	Description	Simplica Exposed Bath & Shower Mixer With Shower Kit
	Weight (kg)	2.23
	Dimensions (mm)	16.5 X 27 X 16.3
	Finish	Chrome
	Flow Rate	With Hand Shower: 6.48 , With Spout: 10.56
	Mounting Location	Wall Mount
Material & Color	Material	Brass
	Color	Chrome
Bathroom Faucet	Type	Bath & Shower
Faucet	Type	Mixer
Connection	Size (mm)	DN15
	Size (inches)	G1/2
Handle	Material	N/A
	Type	Lever
	No. of Handles	1

Bath & Shower Faucet

American Standard

FFASB211-6T1500BT0

Codie

Codie Exposed B&S Mixer W/ Handspray

Components	Hand Shower Included	Yes
	Included	N/A
	Excluded	N/A
Installation	Number of Holes Required	2
Valve	Type	Ceramic